FULL MOTION CORNER MOUNT

PDC650

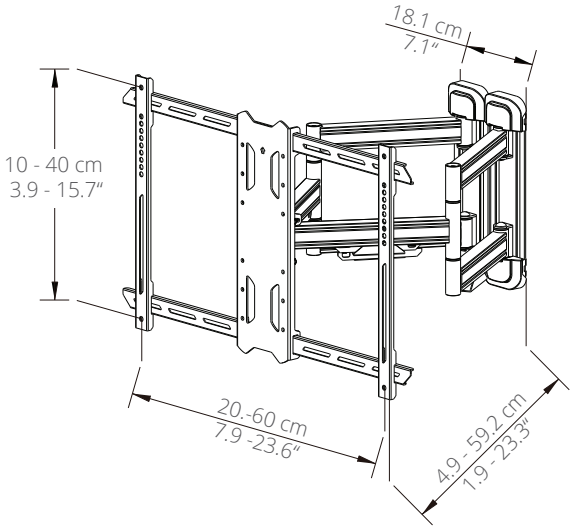

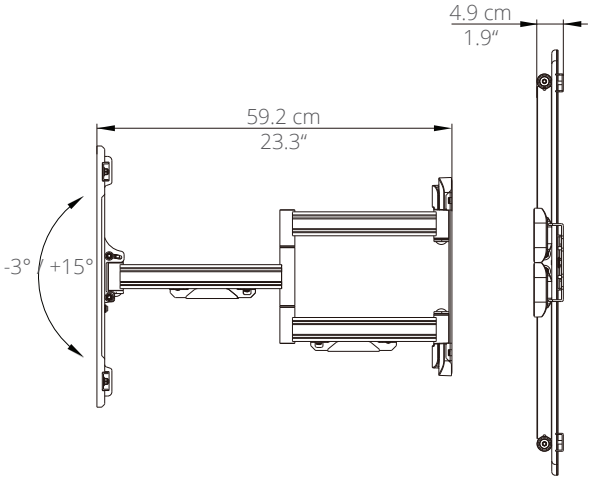

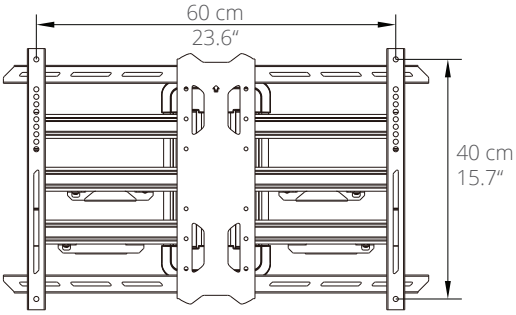

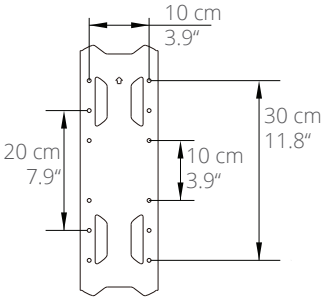

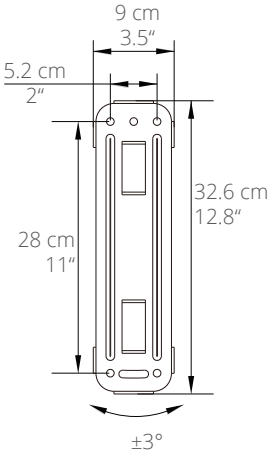

kanto
kantomounts.com