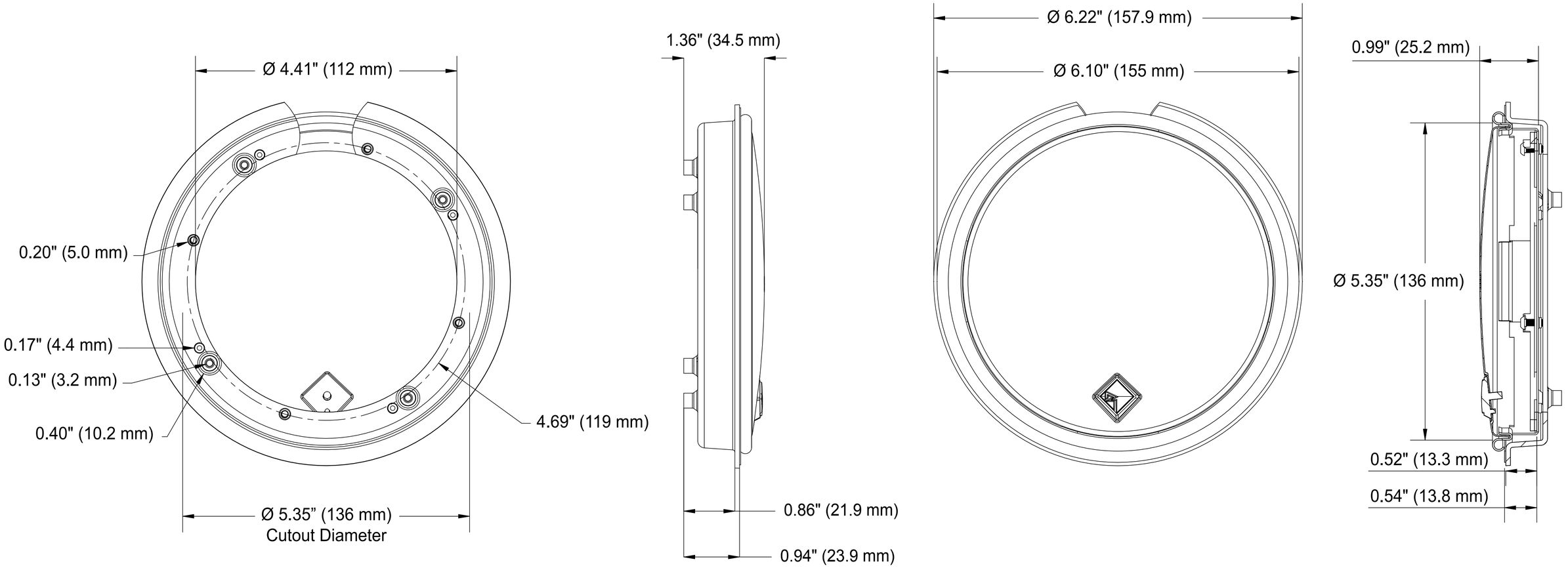
Ø 4.41" (112 mm)
0.20" (5.0 mm)
0.17" (4.4 mm)
0.13" (3.2 mm)
0.40" (10.2 mm)
4.69" (119 mm)
Ø 5.35" (136 mm)
Cutout Diameter
1.36" (34.5 mm)
0.86" (21.9 mm)
0.94" (23.9 mm)
Ø 6.22" (157.9 mm)
Ø 6.10" (155 mm)
0.99" (25.2 mm)
Ø 5.35" (136 mm)
0.52" (13.3 mm)
0.54" (13.8 mm)